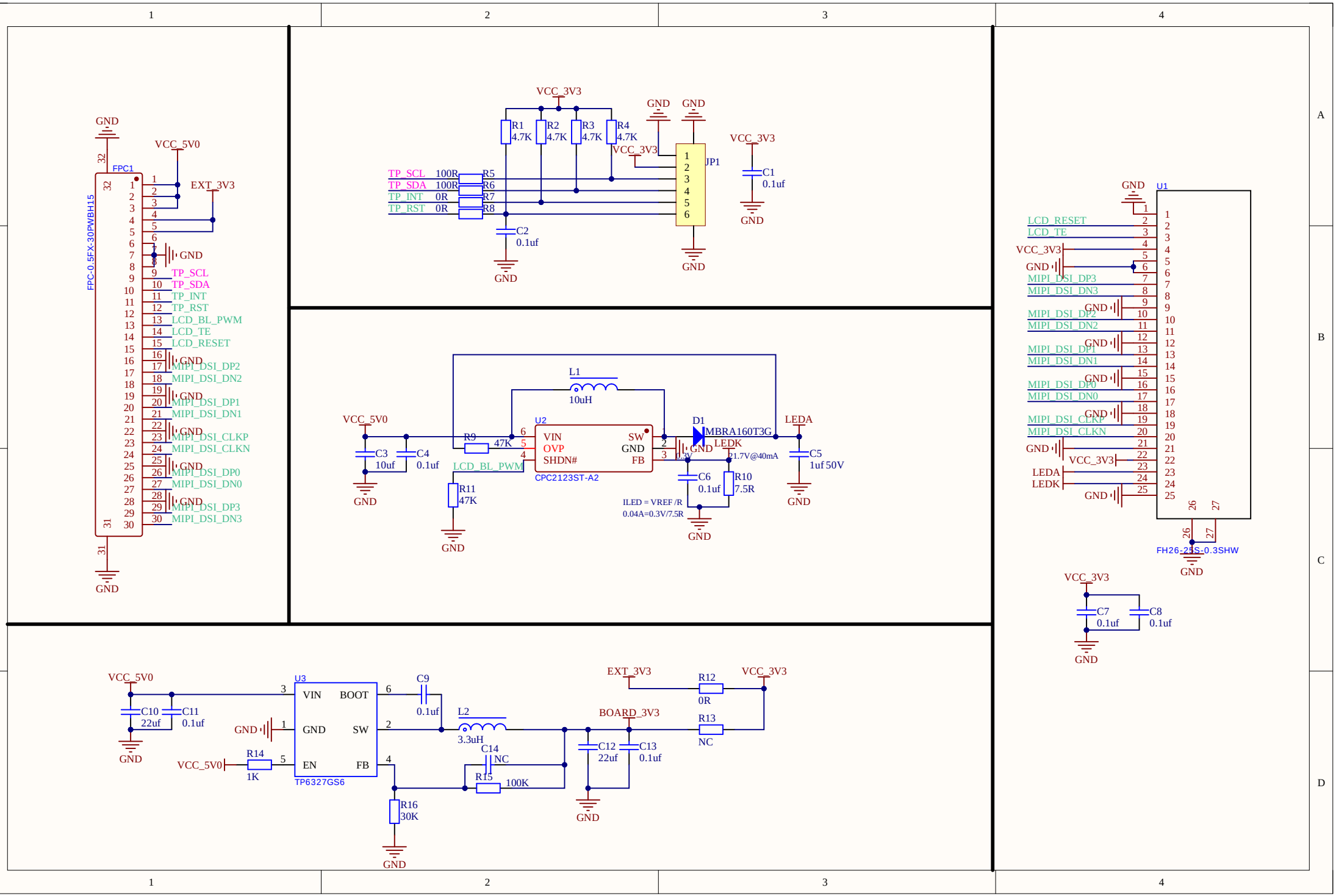
FPC1
FPC-0.5FX-30PWBH15
VCC_5V0
EXT_3V3
GND
TP_SCL
TP_SDA
TP_INT
TP_RST
LCD_BL_PWM
LCD_TE
LCD_RESET
MIPI_DSI_DP2
MIPI_DSI_DN2
MIPI_DSI_DP1
MIPI_DSI_DN1
MIPI_DSI_CLKP
MIPI_DSI_CLKN
MIPI_DSI_DP0
MIPI_DSI_DN0
MIPI_DSI_DP3
MIPI_DSI_DN3
VCC_3V3
R1 4.7K
R2 4.7K
R3 4.7K
R4 4.7K
TP_SCL 100R R5
TP_SDA 100R R6
TP_INT 0R R7
TP_RST 0R R8
C2 0.1uf
JP1
C1 0.1uf
L1 10uH
U2
VIN
OVP
SHDN#
SW
GND
FB
CPC2123ST-A2
R9 47K
R11 47K
C3 10uf
C4 0.1uf
D1 MBRA160T3G
LEDK
LEDA
21.7V@40mA
C5 1uf 50V
C6 0.1uf
R10 7.5R
ILED = VREF /R
0.04A=0.3V/7.5R
U1
FH26-25S-0.3SHW
C7 0.1uf
C8 0.1uf
U3
TP6327GS6
VIN
BOOT
GND
SW
EN
FB
C10 22uf
C11 0.1uf
R14 1K
C9 0.1uf
L2 3.3uH
C14 NC
R15 100K
R16 30K
C12 22uf
C13 0.1uf
BOARD_3V3
R12 0R
R13 NC